AN-9030 EB gun 270 Angle

1, 4, 8, 12 pocket, Evaporation Power 10Kw, 15Kw, 30kw

본 제품 AN-9030모델은 270도 고품질의 전자빔건 이며, 전자빔건과 도가니(크럭시블)가 분리된 제품 입니다.

AN-9030 전자빔건은 증착시 이물질이 건의 필라멘트 쪽으로 튀거나 낙하 하여도 구조상 간섭이 매우 적으며, 증착될(방출된)물질은 열 간섭이 적으므로 고정밀 또는 많은 레이어 공정에 적합하므로 매우 안정적인 빔과 고출력으로서 파우더나 소재를 녹이는데 적합하며 시험장비, 진공증착장비, 반도체장비, 광학장비등 에 사용합니다.

도가니(크럭시블)은 1, 4, 8, 12포켓, 특수형이 있으며 특수형은 주문사양 입니다.

This product, AN-9030 model is Electron Beam-Gun with the angle mobility of 270 degree. Electron Beam-Gun and crucible are detached.

In the process of evaporation, although impurity bounds toward the filament of the gun or drops on it, Interference is architectonically much less.

Due to its less interference, Material-to-be-evaporated(or emitted) is suitable for high-precision, multiple layer process, melting powders or any related-materials with its stable beam and high power.

AN-9030 can be applied to examination equipment, vacuum evaporation equipment, semiconductor equipment, optical equipment etc.

Crucible consists of basic 1, 4, 8, 12 pockets, and special type.

Special type is order specification.

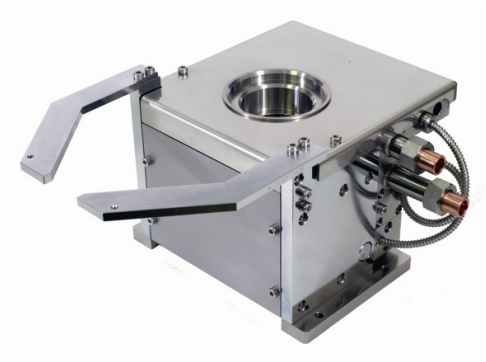

Technical specifications

Output emission power	10Kw, 15Kw, 30Kw
Gun crucible pocket	1, 4, 8, 12 pocket, Capacity 21mL
Shape	Separate EB-gun or crucible(melting pot)
Angle	270 Deg
Output accelerating voltage	3000 to 15000Vdc
Output filament current	0-30A, 0-40A, 0-50A
Beam deflection Adj	Deflection Adj bar
Beam Scanning current	0 to 2.5A
Deflection max frequency	5KHz -3dB
Beam Scanning current X axis	60Hz(X axis), max, output(10App-/+ 2A dc)
X axis scanning max frequency	10KHz -3dB
Beam Scanning current Y axis	600Hz(Y axis),max, output(10App-/+ 2A dc)
Y axis scanning max frequency	10KHz -3dB
Ground terminal	Less than ground resistance 10 ohm
Required cooling water	8 to 10 L/min (2kg/㎠)
Crucible rotation motor power	1ph 220Vac 60Hz 6W, 10w
Crucible position sensor	1,4,6,8,12 point, LED display, negative open collector TR out
EB gun main dimensions (mm)	172(W) X 285(D) X 144(H)
Weight	Approx. 14Kg

ORIGIN
309~310 Namkwang-centlex 440-4 Chung-chun-dong Bu-pyeong-ku Incheon South-Korea
TEL: +82-32-514-5107 FAX +82-32-363-3538 www.origin.ac

Dimensions

Unit mm

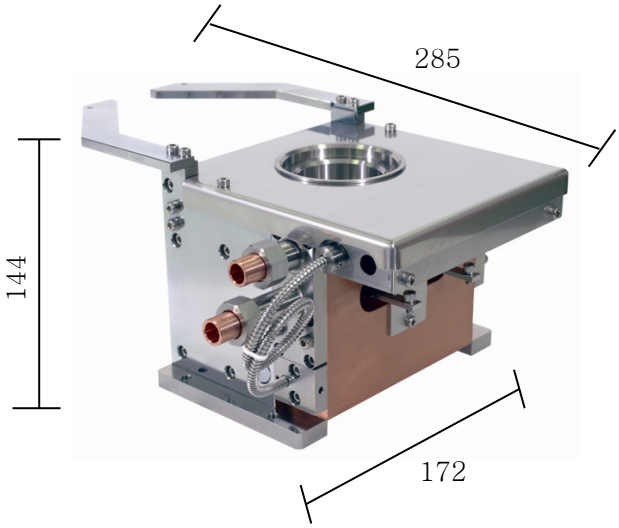

Mount

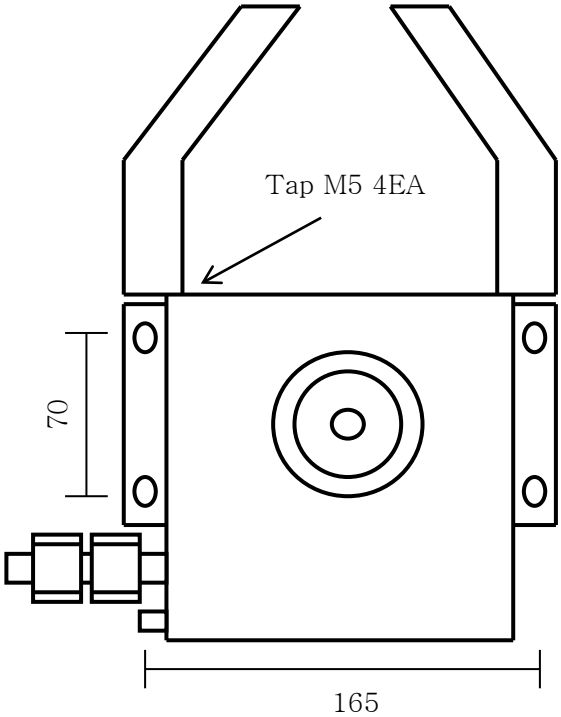

Order code

AN-9030-AA-B-C-D

A	Power (Energy)	**10**=10Kw, **15**=15Kw , **30**=30Kw
B	Crucible pocket	**0**, **1**, **4**, **8**, **A** = 12 Pocket
C	Spare	**0**=Non
D	Spare	**0**=Non

ORIGIN
309~310 Namkwang-centlex 440-4 Chung-chun-dong Bu-pyeong-ku Incheon South-Korea
TEL: +82-32-514-5107 FAX +82-32-363-3538 www.origin.ac

Part order code AN-9030 Only

Filament 0.5Ø	Filament 0.8Ø	Insulate Filament square	Filament socket
P-9030-0001	P-9030-0002	P-9030-0003	P-9030-0004
Body upside cover	Connector cover	Filament cover	Body front cover
P-9030-0005	P-9030-0006	P-9030-0007	P-9030-0008
Extension electrode	1 Grid	2 Grid	Magnetic bar
P-9030-0009	P-9030-0010	P-9030-0011	P-9030-0012
Cooling flexible 300mm	Cooling flexible 700mm	O-Ring Sat	
P-9030-0013	P-9030-0014	P-9030-0015	

ORIGIN
309~310 Namkwang-centlex 440-4 Chung-chun-dong Bu-pyeong-ku Incheon South-Korea
TEL: +82-32-514-5107 FAX +82-32-363-3538 www.origin.ac

Part order code

Feedthrough High voltage power	Feedthrough Power	Feedthrough 6 Pin	Discharge probe 20Kv
P-0000-0001	P-0000-0002	P-0000-0003	P-0000-0004
Feedthrough Cooling water	Feedthrough Gas	Shutter cover 4,8,12 Pocket	Shutter drive Air
P-0000-0005	P-0000-0006	P-0000-0007,8,9	P-0000-0010
Crucible liner copper 18cc x 21cc	Crucible liner copper 10cc x 21cc	Crucible liner carbon 18cc x 21cc	Crucible liner carbon 10cc x 21cc
P-0000-0011	P-0000-0012	P-0000-0013	P-0000-0014
Crucible liner ceramic 18cc x 21cc	Crucible liner ceramic 10cc x 21cc	Crucible liner Special	Crucible cover 4,8,12 Pocket
P-0000-0015	P-0000-0016	P-0000-0017	P-0000-0018,19,20

ORIGIN
309~310 Namkwang-centlex 440-4 Chung-chun-dong Bu-pyeong-ku Incheon South-Korea
TEL: +82-32-514-5107 FAX +82-32-363-3538 www.origin.ac